ELSEVIER

Desalination 165 (2004) 289–298

DESALINATION

www.elsevier.com/locate/desal

Seawater reverse osmosis plant using the pressure exchanger for energy recovery: a calculation model

Giorgio Migliorini*, Elena Luzzo

Fisia Italimpianti, Via De Marini 16, 16149 Genoa, Italy
Tel. +39 (010) 6096-429; Fax +39 (010) 6096-410; email: Giorgio_Migliorini@fisiait.com

Received 16 February 2004; accepted 25 February 2004

Abstract

An RO water desalination system consists of the pre treatment section, the desalination section and the post treatment section. In the new design plants different energy recovery systems are adopted to reduce the energy consumption of desalination section. Among the various energy recovery systems the pressure exchanger (PX) system produces notable benefits not only to the energy consumption but also regarding the high pressure pump size and the consequent scale-up of the system. A secondary effect of the use of PX is the increasing of feed salinity to the desalination section due to the mixing of the concentrate coming from RO section with the portion of feed water passing trough the PX device, on the contact layer between the two streams. The different software supplied by the membrane manufactures does not take into account this phenomenon, making chemical dosing calculation on RO train inlet feed analysis that is different from the raw water analysis. An original model calculation to take into account these different seawater conditions has been developed based on the classical carbonate system equilibrium allowing production of a complete chemical and mass balance of the entire system including the chemicals dosing rate based on raw water characteristics. The model is not affected by the membrane characteristics and can be utilized for an easy and quick basic design of the plant.

Keywords: Reverse osmosis; Pressure exchanger; Seawater salinity; Carbonate system; Mass balance

1. Introduction

The focal point of a reverse osmosis desalination plant is the seawater pre-treatment. The pre-treatment operations can be divided in two main families:

- Physical pre-treatments
- Chemical pre-treatments

The first family includes mainly the filtration

*Corresponding author.

Presented at the EuroMed 2004 conference on Desalination Strategies in South Mediterranean Countries: Cooperation between Mediterranean Countries of Europe and the Southern Rim of the Mediterranean. Sponsored by the European Desalination Society and Office National de l'Eau Potable, Marrakech, Morocco, 30 May–2 June, 2004.

0011-9164/04/$– See front matter © 2004 Elsevier B.V. All rights reserved

operations that are carried out trough sand filters followed by cartridge filters to control the particles maximum size. The second family includes the treatment of the feed like coagulants and poly-electrolyte injection, disinfection, scale reduction, de-chlorination before entering the membrane trains. The calculation programs available from the membrane manufacturers are focused on the calculation of the membrane performances and in general, starting from the seawater analysis and from the temperature an pH conditions, with the limiting parameter of the system flux , define the feed pressure, the permeate characteristics and according to the pre treated feed pH, the acid dosing rate.

The recent introduction of energy recovery system in RO, where the concentrate is in contact with a part of the seawater feed to the plant, has modified the design approach to RO plant sizing. The salinity of the feed to the RO train in fact increases with respect to the raw seawater at the plant battery limits and, as a consequence, while the membrane performances have to be calculated under the increased salinity conditions, the chemical pretreatment has to be calculated on the raw water original conditions.

An original calculation model to take into account these phenomena has been developed to produce the complete mass balance of the system. In the following sections an overview of the chemical treatment system is made and the calculation program is described.

2. Feed water chemical treatments

2.1. Chlorination

As regards the chlorine dosing rate and the chlorination management it is possible use two different modes of operation — the continuous dosing system and the shock dosing system or both the systems. The dosing rate for continuous treatment is in general between 1 up to 3 ppm, whereas the shock can reach 5 ppm; also the frequency for the shock dosing can be different for different plant and can change from 4 times a day to once a day.

The recent trends in RO design suggest to adopt a procedure of random shock dosing. It is important to define what is the chlorine residual on feed water because before feeding the water to the membranes it is necessary to provide the dechlorination of the stream to avoid troubles to the membranes.

2.2. Coagulation

2.2.1. Premises

Flocculation and coagulation agents are added to water to create nuclei onto which colloidal and suspended material in the water can adsorb, thus creating floc of larger dimensions and mass which can be removed by sedimentation followed by sand filtration.

The design of coagulation process involves selection of proper coagulant chemicals and their dosage that can be determined experimentally for each raw water source; the coagulants can be of two different types:

- Polyelectrolytes
- Iron or aluminium salts

In general the most common coagulant utilized is the ferric chloride but in some installations it is possible to use both the types to improve the sand filters performances.

2.2.2. Aqueous chemistry of iron salts

Coagulants reactions are carried out by the addition of a coagulant, usually a metal salt to water. Commonly used coagulants are ferric sulphate ($Fe_2(SO_4)_3$), ferric chloride ($FeCl_3$), and alum (aluminium sulphate, $Al_2(SO_4)_3 \times 14\ H_2O$).

For the RO feedwater treatment the most common coagulant used is the ferric and the relevant reaction is:

$$2FeCl_3 + 3Ca(HCO_3)_2 \Leftrightarrow 2Fe(OH)_3 + \\ + 3CaCl_2 + 6CO_2 \quad (1)$$

Because of the consumption of alkalinity, CO_2 is produced during coagulation. The actual amount of coagulant required for destabilization of colloids may depend, not only on the reaction stoichiometry, but also on other operational conditions such as ionic species, pH value, temperature, type and properties of particles, mixing energy input and the content of metal ions in the coagulant. Normally the dosing rate usually utilized is in the range between 0.3 and 3 ppm.

According to the stoichiometric reaction it is possible to calculate the relevant CO_2 released and the residual bicarbonate content after the injection.

$$CO_2 = X_{FeCl_3} \cdot \frac{6\times 44}{2\times 162.5} \text{ ppm} \quad (2)$$

The corresponding bicarbonates reaction is:

$$HCO_3^{2-} = X_{FeCl_3} \cdot \frac{3\times 122}{2\times 162.5} \text{ ppm} \quad (3)$$

2.3. Scaling control

2.3.1. Carbonic acid equilibria

The seawater, under normal conditions, is usually supersaturated with calcium carbonate. The pH of most natural waters is generally assumed to be controlled by the carbonic acid system.

The applicable equilibrium reactions are:

$$CO_2 + H_2O \leftrightarrow (H_2CO_3) \leftrightarrow H^+ + HCO_3^- \quad (4)$$

$$HCO_3^- \rightarrow H^+ + CO_3^{2-} \quad (5)$$

The $CO_2/HCO_3^-/CO_3^{2-}$ equilibrium in seawater can be calculated starting from alkalinity and pH values trough the calculation of the following equations:

$$k_w = [H^+]\cdot[OH^-] \quad (6)$$

k_w is the ionisation product of water =

$$= 10^{6.0486-\frac{4471.33}{T_w+273}-0.017053\cdot(T_w+273)}$$

k_1 is the first dissociation constant =

$$= 10^{14.8435-\frac{3404.71}{T_w+273}-0.032786\cdot(T_w+273)}$$

k_2 is the second dissociation constant =

$$= 10^{6.498-\frac{2909.39}{T_w+273}-0.02379\cdot(T_w+273)}$$

The following relations have to be taken into account:

$$[Alk] = \frac{\text{total alkalinity as } CaCO_3}{50\times 1000} \text{ g-eq/l} \quad (7)$$

$[H^+]$ = hydrogen ion concentration, g-ion/l
$= 10^{-pH}$ (8)

$$[HCO_3^-] = \frac{\text{ppm } [HCO_3^-]}{61\times 1000} \text{ g-ion/l} \quad (9)$$

$$[CO_3^{2-}] = \frac{\text{ppm } [CO_3^{2-}]}{60\times 1000} \text{ g-ion/l} \quad (10)$$

$$[CO_2] = \frac{\text{ppm } [CO_2]}{44\times 1000} \text{ g-ion/l} \quad (11)$$

The following ionic balance can be also written:

$$[Alk] + [H^+] = [HCO_3^-] + 2\,[CO_3^{2-}] + [OH^-] \quad (12)$$

And using the ionisation and dissociation constants defined above, the following final relations are obtained:

$$[HCO_3^{2-}] = \frac{[Alk] + [H^+] - \frac{k_w}{[H^+]}}{1 + \frac{2k_2}{[H^+]}} \text{ g-ion/l} \quad (13)$$

$$[CO_3^{2-}] = \frac{k_2}{[H^+]}[HCO_3^-] \text{ g-ion/l} \quad (14)$$

$$[CO_2] = \frac{[H^+]}{k_1}\,[HCO_3^-] \text{ g-ion/l} \quad (15)$$

For a defined pH and alkalinity is possible to determine the bicarbonate content that contribute to the CO_2 formation.

2.3.2. Limiting salt calculation

Scaling control is essential in RO/NF membrane filtration. The amount of antiscalant or acid addition is determined by the limiting salt. A diffusion controlled membrane process will naturally concentrate salt on the feed side of the membrane. If excessive water is passed through the membrane, this concentration process will continue until salt precipitates and scaling occurs reducing membrane productivity and, consequently the system recovery. The limiting salt can be determined from the solubility products of potential limiting salts and the actual feed-stream water quality and from the ionic strength. Calcium carbonate scaling is commonly controlled by sulphuric acid addition; however, sulphate salts are often the limiting salt.

General equations for the solubility products and ionic strength approximations are given as follows:

$$A_nB_m \Leftrightarrow nA^{+p} + mB^{-q} \tag{16}$$

$$K_{sp} = \left(A^{+p}\right)^n \left(B^{-q}\right)^m \tag{17}$$

$$K_{sp} = \left(a\frac{A^{+p}}{x}\right)^n \left(b\frac{B^{-q}}{x}\right)^m \tag{18}$$

where x is the fraction remaining, K_{sp} — solubility product, a — fraction of cation retained, b — fraction of anion retained.

$$\mu = \frac{1}{2}\sum C_i Z_i^2 \tag{19}$$

where μ is ionic strength, C = mol/l, Z is the ion charge.

$$\log(\gamma) = -0.52Z^2\frac{\sqrt{\mu}}{1+\sqrt{\mu}} = p\gamma \tag{20}$$

where γ is the activity coefficient.

Once the required pH has been determined for calcium carbonate scaling, the required acid dose can be calculated. The calculation can be applied in any case to calculate the relationship between pH and acid dosing rate.

2.3.3. Acid dosing calculation

The following calculation has the scope to define the relationship between the pH and the acid dosing.

We can start from the equation:

$$k_1 = \frac{[H^+]\cdot[HCO_3^-]}{[CO_2]} \tag{21}$$

that we can also write evidencing the activity coefficient like:

$$k_1 = \frac{[H^+]\cdot[\gamma HCO_3^-]}{[CO_2]} \tag{22}$$

where k_1 is the first dissociation constant as described before. $p\gamma_1$ is already calculated in limiting salt calculation.

2.4. Dechlorination

2.4.1. Premises

Before entering in the membrane trains the feed water residual chlorine content has to be removed to avoid damages to the membrane. The stoichiometric weight ratios of the most common sulphite compounds needed per mg/l of residual chlorine are given in Table 1.

2.5. Scale inhibitors

Scale inhibitors (antiscalants) can be used to control carbonate scaling, sulphate scaling and

Table 1
Dechlorination compounds needs

Dechlorination compound			Quantity, mg/(mg/l) residual	
Name	Formula	Molecular weight	Stoichiometric amount	Range in use
Sulphur dioxide	SO_2	64.09	0.903	1.0–1.2
Sodium sulphite	Na_2SO_3	126.04	1.775	1.8–2.0
Sodium bisulphite	$NaHSO_3$	104.06	1.465	1.5–1.7
Sodium metabisulphite	$Na_2S_2O_5$	190.10	1.338	1.4–1.6

calcium fluoride scaling. Scale inhibitors have a "threshold effect", which means that minor amount adsorb specifically to the surface of microcrystals thereby preventing further growth and precipitation of the crystals.

The dosage rates are in general defined by the antiscalant manufactures. In RO plants operating on seawater with TDS in the range of 35,000 ppm, scaling is not such a problem as in brackish water plants, because the recovery of seawater plants is limited by the osmotic pressure of the concentrate stream to 30–45%. However, for safety reasons, for recovery ratio greater than 35%, is necessary use an antiscale inhibitor.

As final comment we underline that the calcium presented in the raw water may form a precipitate with the antiscalant at high antiscalant concentrations.

3. Permeate posttreatment

3.1. Premises

The primary post treatment unit operations are the disinfection and alkalinity recovery. Solute removal eliminates carbonate alkalinity, but all dissolved gases including carbon dioxide and hydrogen sulphide pass through the membranes. The sequence of unit operations assumed here is disinfection followed by alkalinity recovery.

3.2. Disinfection

If chlorine is added to the process stream before aeration, stabilization occurs during aeration. The chlorine converts some alkalinity that passes through the membranes to carbon dioxide. The pH following chlorination can be determined using pK1 for carbonate system and the alpha for OCl^-; this equation is applicable only when HCO_3^- is present. Once HCO_3^- is neutralized during chlorination, pH can be determined by summing the protons from the HCl added past the point of neutralization to the protons at neutralization.

$$Cl_2 + H_2O \Rightarrow HOCl + HCl \quad (23)$$

The saturation pK for this last reaction is equal to 7.4

$$pH = pK_{H_2CO_3} + \log\left[\frac{HCO_3^- - \left(1+\alpha_{OCl^-}\right)\cdot C_{T_{Cl_2}}}{H_2CO_3 + \left(1+\alpha_{OCl^-}\right)\cdot C_{T_{Cl_2}}}\right] \quad (24)$$

Chlorine addition to water will produce equal moles of hypochlorous acid and hydrochloric acid. The hypochlorous acid will partially ionize to hypochlorite ions and protons; the hydrochloric acid will completely ionize, producing protons and chloride ions. One mole of protons will be produced for every mole of hydrochloric acid and every mole of hypochlorite ion produced. Consequently, the complete proton production during chlorination would be cancelled by the addition of OH^- as shown here.

3.3. Alkalinity recovery

If acid addition is used for scaling control, all the alkalinity in the raw water will be destroyed

but not lost. The membrane is a closed system and the carbon dioxide will remain under pressure until exposed to an open system. Alkalinity recovery needs to be considered during scaling control and depends on how much carbon dioxide and bicarbonate is in the raw water.

Normally finished waters with 1–3 meq/l of bicarbonate alkalinity are considered highly desirable for corrosion control. Since carbon dioxide will pass unhindered through the membrane, the desired amount of alkalinity can be recovered in the permeate by acidifying the desired amount, passing it trough the membrane, and adding the desired amount of base to convert the carbon dioxide back to its original bicarbonate form.

In the case the base used is $Ca(OH)_2$ the reaction can be resumed as:

$$2CO_2 + H_2O + Ca(OH)_2 \Rightarrow Ca^{2+} + 2HCO_3^- + H_2O \quad (25)$$

Considering to leave on the permeate a CO_2 residual content of 0.5 ppm (CO_{2res}) we obtain the dosing rate of lime to convert the alkalinity in bicarbonate form.

$$Ca(OH)_2 = \frac{(CO_2 - CO_{2res})}{88} \cdot 74 \quad (26)$$

The quantity of bicarbonates produced is equal to:

$$HCO_3^- = \frac{(CO_2 - CO_{2res})}{44} \cdot 61 \quad (27)$$

The quantity of Ca^{2+} added is:

$$Ca^{2+} = \frac{(CO_2 - CO_{2res})}{88} \cdot 40 \quad (28)$$

4. Energy recovery system balance

The pressure exchanger (PX) device transfers the energy from the concentrate stream directly to the feed stream using a cylindrical rotor with longitudinal ducts. A virtual liquid piston moves back and forth inside each duct creating a barrier zone that inhibits mixing between the concentrate reject and new seawater streams. At 1500 rpm one revolution is completed every 1/25 s. Due to this short cycle time membrane feed water concentration typically increase of 2–3%.

The consequence of this concentration increasing is that the reverse osmosis section has to be designed to treat water with a different salinity of the original raw water.

The chemicals dosing rates and in particular the acid addition have to be calculated on the original water, whereas the reverse osmosis membrane performances have to be evaluated on the modified salinity figures.

The calculation programs that the membrane manufacturers supply to the designers does not take into account this fact because are focused on the membrane performances calculation starting from the feed analysis. The PX circuit is shown in Fig. 1.

The results of the balance around the system for a train of 1 MIGD are shown in Table 2.

As evidenced in the sheet the feed water salinity at the membranes inlet is increased of 2.3% with respect to the raw water. Moreover also the carbonic species equilibrium are modified changing the membrane inlet conditions.

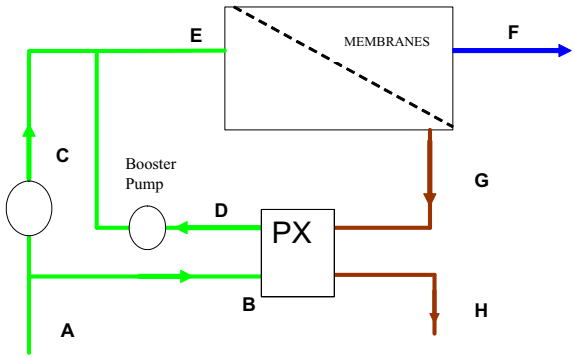

Fig. 1. PX circuit.

Table 2
Results of the balance around the system for a train of 1 MIGD

	A	B	C	D	E	F	G	H
Flow								
GPM	2087.0	1213.2	873.8	1213.3	2087.0	834.8	1252.2	1252.2
m^3/h	474	276	198	276	474	190	284	284
m^3/d	11375	6612	4762	6612	11375	4549.9	6825	6825
Pressure								
psi	14.5	14.5	914.96	871.45	914.96	0	885.96	0
bar	1.0	1.0	63.1	60.1	63.1	0	61.1	0
Quality	sea	sea	sea	sea	sea	perm	brine	brine
TDS	42,000	42,000	42,000	43,663	42,967	236	71,454	68,732

5. Calculation model

The model developed has the aim to make the complete balance calculation of a reverse osmosis desalination plant adopting the energy recovery device.

In particular for each stream the following parameters are calculated:

- Ionic salt balance
- Carbonic species equilibrium
- pH
- Saturation pH
- Scale indexes

The main inputs to the calculation workbook are resumed in Table 3.

The raw water analysis input is corrected taking into account the PX salt losses to make the exact feeding conditions at the membranes inlet (Table 4).

The chemicals dosing rate for the feed water are calculated starting from the raw water analysis and for each step of the treatment the complete carbonic species equilibrium is calculated. The calculation workbook includes:

- Data input worksheet
- Calculation worksheets divided in three sections:
  - Seawater pre treatment
  - PX balance
  - Permeate post treatment

Table 3
RO desalination plant summary

General information	
Plant	RO plant
Seawater temperature, °C	27
Permeate production, m^3/h	189.58
Number of units	3
Recovery, %	40
Average system flux, l/m^2h	14
Membrane DP, bar	2
Design parameters	
Raw water pH	8.1
Treated water pH	7.5
Residual CO_2 in permeate, ppm	0.05
Salinity increase in respect to nominal conditions, %	0
Salinity increase through ERS, %	3.96
Fouling factor	1
Circuit pressure data	
Concentrate residual pressure	1
Sand filters pressure drop	2
Cartridge filters pressure drop	0.5
Line pressure drop	0.1

- Mass balance

The PX balance is reported in Appendix 1, whereas Appendix 2 shows the complete mass balance of the plant for a single pass solution.

The model can quickly simulate the behaviour of the complete RO system in different running conditions starting from a first design approach

Table 4
Seawater analysis

	Seawater analysis		Seawater analysis design		Seawater RO inlet	
	ppm ions	ppm $CaCO_3$	ppm ions	ppm $CaCO_3$	ppm ions	ppm $CaCO_3$
Calcium (++)	500.60	1251.50	500.60	1,251.50	512.49	1,281.24
Magnesium (++)	1,773.90	7,294.00	1,773.90	7,294.00	1,816.05	7,467.30
Sodium (++)	12,573.10	27,336.39	12,573.10	27,336.39	12,871.84	27,985.90
Potassium (+)	454.70	581.52	454.70	581.52	465.50	595.33
Total cations (+)	15,302.30	36,463.41	15,302.30	36,463.41	25,665.68	37,329.78
Chloride (–)	23,561.00	33,224.75	23,561.00	33,224.75	24,123.91	34,018.54
Bromides (–)	0.00	0.00	0.00	0.00	0.00	0.00
Sulfate (– –)	3,024.20	3,148.24	3,024.20	3,148.24	3,101.25	3,228.45
Phosphate (– –)	0.00	0.00	0.00	0.00	0.00	0.00
Fluorides	1.40	3.68	1.40	3.68	1.43	3.77
Nitrates	0.00	0.00	0.00	0.00	0.00	0.00
Carbonate	0.51	0.85	0.51	0.85	0.16	0.26
Bicarbonate	110.70	90.71	110.70	90.71	108.74	89.10
Total anions (–)	26,697.81	36,468.24	26,697.81	36,468.24	27,335.48	37,349.12
M (T) alkalinity		91.56		91.56		89.36
P alkalinity		0.43		0.43		0.13
Carbonate hardness		91.56		91.56		89.36
Non-carbonate hardness		8,453.93		8,453.93		8,659.18
Total hardness		8,545.50		8,545.50		8,748.54
TDS	42,000.11		42,000.11		43,001.36	

made by means of common membrane manufacturers' software to define the main system characteristics.

All the software available does not include the possibility to calculate the feed water characteristics variation during the different RO pre-treatment operation before the membrane train inlet and constrain the designer to make boring calculation to define the true feed to the membrane section.

The main feature of the new calculation system is that the water quality in terms of pH, TDS and carbonic species during the various phases of the process can be followed and the PX effect on the system performances is taken into account, carrying out a new approach to the RO plant design software.

Bibliography

High Temperature Scale Inhibitors for Seawater Distillation. Watson Desalination Consultants, October 1979.

H.E. Homig, Seawater and Seawater Distillation, Vulkan Verlag, 1978

J.A. Medina San Juan, Desalacion de agues salobres y de mar — osmosis inverse. Ediciones Mundi, Prensa, 2000.

Water Quality and Treatment. American Water Works Association, 5th ed., McGraw Hill, 1999.

Water Treatment Plant. American Water Works Association, 3rd ed., McGraw Hill, 1998.

Water Treatment — Membrane Processes. American Water Works Association Research Foundation, Lyonnaise des Eaux, Water Research Commission of South Africa, McGraw Hill, 1996.

Appendix 1

PX balance

	Seawater to feed pumps		Seawater to PX		HP seawater from feed pump		HP seawater from PX		Feed to membranes		Permeate from membranes		Concentrate from membranes		Concentrate discharge	
	ppm ions	ppm $CaCO_3$	ppm ions	ppm $CaCO_3$	ppm ions	ppm $CaCO_3$	ppm ions	ppm $CaCO_3$	ppm ions	ppm $CaCO_3$	ppm ions	ppm $CaCO_3$	ppm ions	ppm $CaCO_3$	ppm ions	ppm $CaCO_3$
Flow, m^3/h	950.00		552.29		397.71		562.29		950.00		380.00		570.00		570.00	
Free CO_2, ppm		13.70		13.70		13.70		13.70		13.70		13.70		13.70		13.70
Temperature, °C	30		30		30		30		30		30		30		30	
Cations																
Calcium (++)	529.00	1322.50	529.00	1322.50	529.00	1322.50	549.95	1374.87	541.18	1352.95	0.95	2.36	901.33	2253.33	865.64	2164.10
Magnesium (++)	1531.00	6295.23	1531.00	6295.23	1531.00	6295.23	1591.63	6544.52	1566.25	6440.16	2.78	11.43	2610.41	10733.59	2507.04	10308.54
Sodium (++)	14239.00	30958.39	14239.00	30958.39	14239.00	30958.39	14802.86	32184.34	14566.80	31671.10	104.28	226.69	24278.01	52785.16	23316.60	50694.87
Potassium (++)	544.00	695.72	544.00	695.72	544.00	695.72	565.54	723.27	556.52	711.74	4.55	5.82	927.54	1186.23	890.81	1139.26
Total cations (+)	16843.00	39271.84	16843.00	39271.84	16843.00	39271.84	17509.98	40827.00	17230.75	40175.94	112.54	246.30	28717.29	56958.33	27580.09	64306.78
Anions																
Chloride (–)	24975.00	35218.72	24975.00	35218.72	24975.00	35218.72	25964.01	36613.38	25549.97	36029.51	163.57	230.87	42583.01	60048.80	49896.72	57670.87
Bromides (–)	0.00	0.00	0.00	0.00	0.00	0.00	0.00	0.00	0.00	0.00	0.00	0.00	0.00	0.00	0.00	0.00
Sulfate (– –)	3754.48	3908.48	3754.48	3908.48	3754.48	3908.48	3903.16	4063.25	3840.92	3998.46	2.51	2.61	6401.07	6663.62	6147.59	6399.74
Phosphate (– –)	0.00	0.00	0.00	0.00	0.00	0.00	0.00	0.00	0.00	0.00	0.00	0.00	0.00	0.00	0.00	0.00
Fluorides	0.00	0.00	0.00	0.00	0.00	0.00	0.00	0.00	0.00	0.00	0.00	0.00	0.00	0.00	0.00	0.00
Nitrates	6.20	5.00	6.20	5.00	6.20	5.00	6.45	5.20	6.34	5.12	6.02	4.86	10.57	8.53	10.15	8.19
Carbonate	0.11	0.18	0.11	0.18	0.11	0.18	0.11	0.19	0.11	0.18	0.00	0.00	0.18	0.31	0.18	0.29
Bicarbonate	141.68	116.09	141.68	116.09	141.68	116.09	147.29	120.69	144.94	118.77	1.45	1.19	241.28	197.71	231.72	189.88
Total anions (–)	28877.47	39248.47	28877.47	39248.47	28877.47	39248.47	30021.02	40802.71	29542.28	40152.03	173.56	239.32	49236.11	66918.96	47286.36	64268.97
M (T) alkalinity		116.27		116.27		116.27		120.88		118.95		1.19		198.02		190.18
P alkalinity		0.09		0.09		0.09		0.09		0.09		0.00		0.15		0.15
Carbonate hardness		116.27		116.27		116.27		120.88		118.95		1.19		198.02		190.18
Non-carbonate hardness		7501.48		7501.48		7501.48		7798.51		7674.15		12.61		12788.91		12282.47
Total hardness		7617.73		7617.73		7617.73		7919.39		7793.10		13.80		12986.93		12472.65
TDS, mg/l	45720.47		45720.47		45720.47		47531.00		46773.03		286.09		77953.40		74866.45	
pH		7.20		7.20		7.20		7.22		7.21		5.21		7.43		7.41
Saturation pH		6.50		6.50		6.50		6.46		6.48		11.17		6.06		6.09
Langelier index		0.70		0.70		0.70		0.75		0.73		–5.96		1.38		1.32
Stiff and Davis index		–0.59		–0.59		–0.59		–0.55		–0.57		–5.78		0.05		–0.01
Ryzner index		5.79		5.79		5.79		5.71		5.75		17.13		4.68		4.76
Ca/Mg		0.35		0.35		0.35		0.21		0.21		0.21		0.21		0.21
$\frac{c(Cl^-) + 2c(SO_4^{2-})}{HCO_3}$ mole/mole	337.03		337.03		337.03		337.03		337.03		196.45		337.42		337.42	

Appendix 2

Reverse osmosis plant 3 MGD. Mass balance. DWG.
Seawater temperature 30°C.

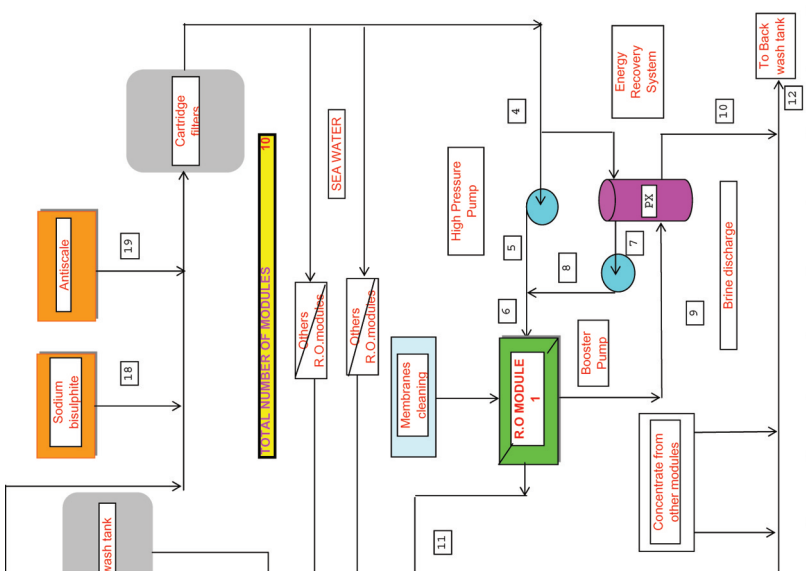

	SEA WATER TOTAL	BACK WASH SEA WATER	SEA WATER AFTER MEDIA FILTERS	SEA WATER TO R.O. SYSTEM	SEA WATER AFTER H.P. PUMPS	SEA WATER TO R.O. MODULES	SEA WATER FROM ENERGY RECOVERY SYSTEM	SEA WATER FROM BOOSTER PUMPS	CONCENTRATE FROM R.O. MODULES	CONCENTRATE FROM ENERGY RECOVERY SYSTEM	PERMEATE FROM R.O. MODULES	CONCENTRATE TOTAL	PERMEATE TOTAL	PRE CHLORINATION	SHOCK CHLORINATION	$FeCl_3$ l/h	H_2SO_4 l/h	SODIUM BISULPHITE l/h	ANTISCALE l/h	CHLORINE	$Ca(OH)_2$ l/h
STREAM NUMBER	1	2	3	4	5	6	7	8	9	10	11	12	13	14	15	16	17	18	19	20	21
Flow (m^3/h)	9500		9500	950,0	398	950,0	552,29	552,29	570,00	570,00	380	5700,00	3800	14,25	47,50	87,02	67,39	222,0	214,0	5,32	872,4
Pressure (bara)	4,6		3,5	2	67,33	67,33	64,33	67,33	65,33	1	1,7	1	1,7								
TDS (p.p.m.)	45719		45719	45719	45719	46773	47531	47531	77953	74866	286	74866	286								
Dosage (p.p.m.)														1,5	5	5	13,76	2,5	2,5	0,7	11,48
Concentration (%) or gr/l														1000,0	1000,0	40,00%	98,00%	10,00%	10,00%	1000,0	50,0