International Desalination Association®

New Horizons for Desalination

THERMAL DESALINATION PLANTS FEED WATER PRETREATEMENT TO INCREASE PERFORMANCES OF EXISTING PLANTS

Giorgio Migliorini, Elio Schelotto

Fisia Italimpianti

Genova

MSF DESALINATION TOP BRINE TEMPERATURE IMPACT

The performance of thermal desalination plants is strongly influenced by the maximum cycle temperature. The limiting value of this parameter is connected to the scaling potential of feed sea water in particular due to carbonic species and sulfate salts concentration. Different treatment methods were used to avoid salts precipitation based on pH correction or on the use of scale inhibitors.

MSF ORIGINAL MAKE UP TREATMENT

The original acid treatment was replaced since the early 80 with high temperature scale inhibitors with maximum operating temperatures of 115 °C.

At present the majority of desalination plants installed operates with top brine temperature (T.B.T.) between 90 °C to 105 °C using anti scale chemicals.

MSF DESALINATION MAKE UP TREATMENT

The increase of T.B.T. allows to increase the production and performance ratio of existing plant with some retrofitting of desalination unit.

Different make up water treatment possibilities to improve the feed water characteristics allowing to adopt higher T.B.T. are examined and compared.

In particular nanofiltration and forward osmosis are taken into consideration as promising technologies to improve the plant performances reducing the chemicals consumption and the environmental impact.

MSF DESALINATION MAIN PARAMETERS

Thermal desalination plants performances depend from different main parameters.

The Top Brine Temperature is strongly correlated to the Performance Ratio of the plant but it subjected to the limits imposed by the scaling potential of the sea water or brine.

	Range	
Climatic and environmental conditions	MSF	MED
Sea water temperature	15 – 40 °C	15 – 40 °C
Sea water salinity	35 – 50 gr/l	35 – 50 gr/l
Environmental constraints		
Blowdown concentration factor	1, 5 – 1,8	1, 5 – 1,8
Cooling water DT	8 -10 °C	8 -10 °C
Process Parameters		
Performance Ratio	8 -13 kg/2326 kj	8 -10 kg/2326 kj
Top Brine Temperature	90 -110 °C	65 -80 °C

ACID TREATMENT MSF DESALINATION PLANTS

In the MSF plants with acid treatment the $H2_SO_4$ injected reacts with carbonate species present in sea water a producing CO_2 and H_2O preventing carbonate scaling.
The CO_2 is removed by stripping air in a atmospheric decarbonating tower and the oxygen is removed in a vacuum deareator.

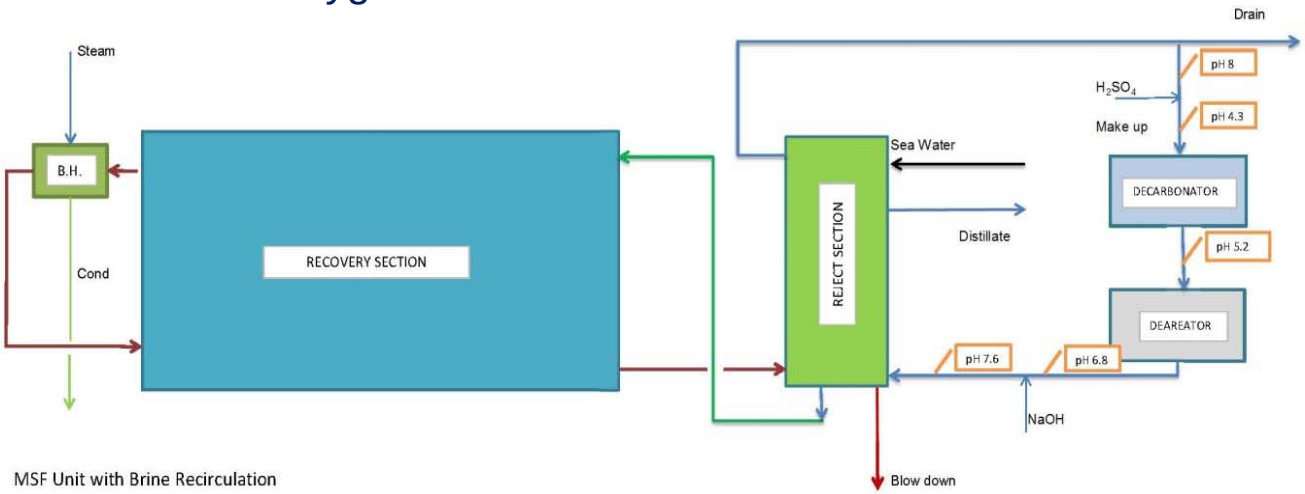

MSF Unit with Brine Recirculation

SULPHATE SOLUBILITY LIMITS

The solid calcium sulphate may form in three different modifications, namely as anhydrite CaS04, as hemihydrate CaS04 + ½ H2O and as dihydrate CaS04 . 2H20 (gypsum).

These different crystalline forms differ markedly in solubility. The least soluble is the anhydrite and the most soluble is the dihydrate.

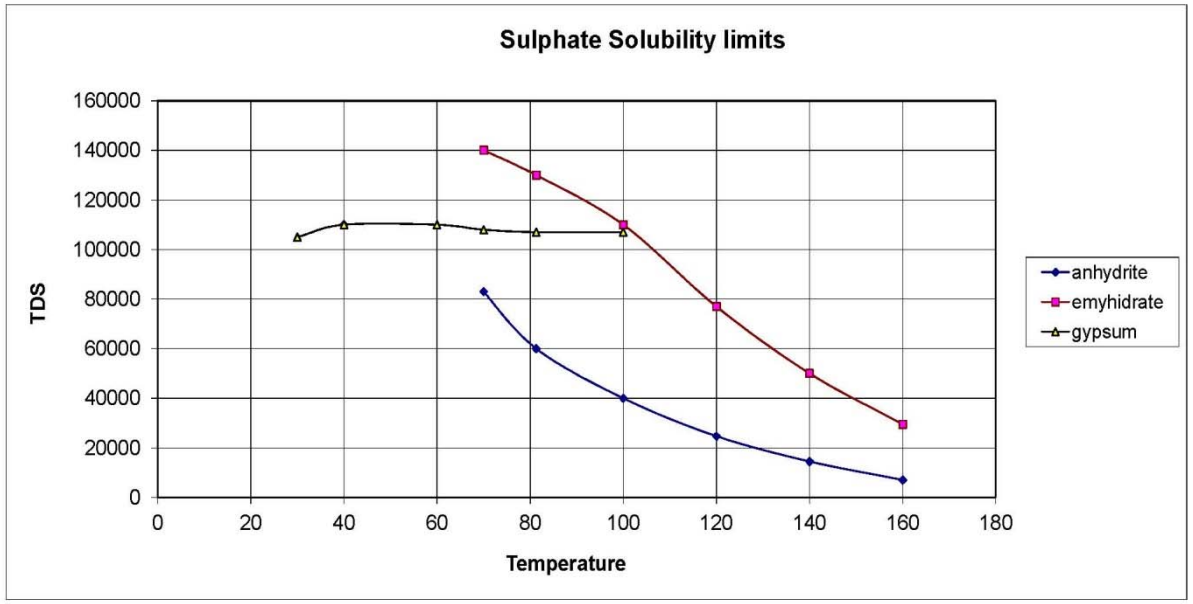

Make up acid treatment advantages and disadvantages

	MSF with antiscale treatment	MSF with acid treatment
Plant configuration	☺	😐
Chemical costs	😐	☺
M.P. consumption (ejectors)	😐	☺
Health and Safety	☺	☹
Corrosion	😐	😐
Performance ratio	😐	☺
CO2 recovery for distillate remineralization	☺	☹

MSF PLANT SHORT CUT EVALUATION

The performances evaluation of the MSF plant have been carried out using simplified relationships to correlate distillate production, top brine temperature (TBT) and heat exchange surfaces of MSF unit.

$$S_{TOT} = \frac{R \cdot cp_{S.} \cdot N}{U} \cdot \ln \frac{\dfrac{D \cdot h_V}{G.O.R. \cdot R \cdot cp_S} - \Delta}{\dfrac{D \cdot h_V}{G.O.R. \cdot R \cdot cp_S} - \Delta - \dfrac{T_T - T_N}{N}}$$

$$D = \frac{R \cdot cp_{S.} \cdot GOR}{h_V} \cdot \frac{\left[\Delta \cdot \left(e^{\frac{S \cdot U}{R \cdot cp_S \cdot N}} - 1 \right) + \left(e^{\frac{S \cdot U}{R \cdot cp_S \cdot N}} \right) \cdot \left(\frac{T_T - T_N}{N} \right) \right]}{\left(e^{\frac{S \cdot U}{R \cdot cp_S \cdot N}} - 1 \right)}$$

PRODUCTION INCREASE VS TBT

In the following graph the production is related to TBT increase; for each °C increase the production increase of about 1%

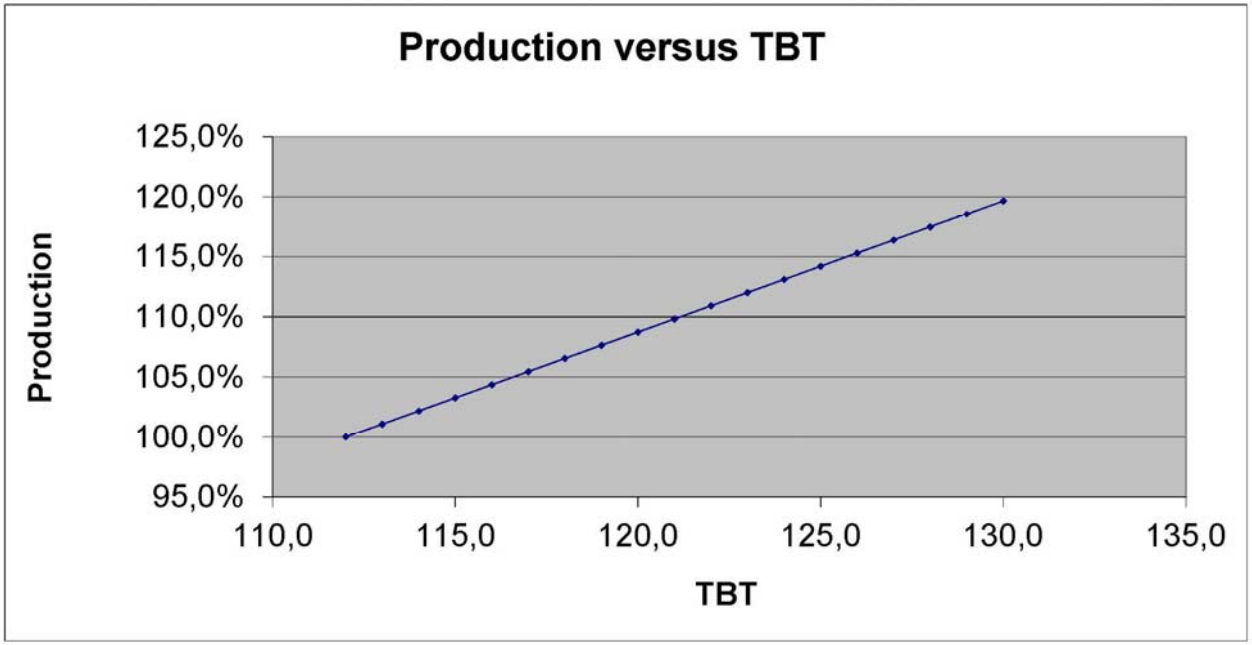

SURFACE VS TBT

In the following graph the surface reduction is related to TBT increase; for each °C increase the surface decrease of about 1%

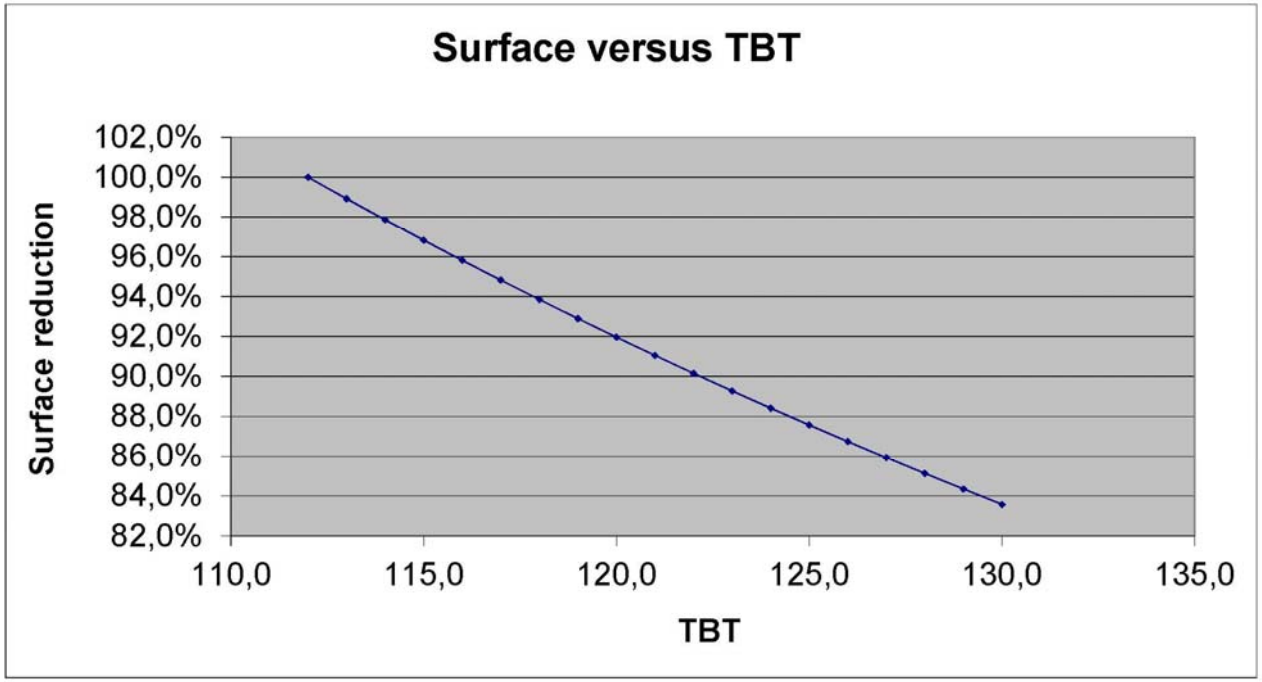

Fisia Italimpianti

UF and NANOFILTRATION PILOT PLANT

Fisia Italimpianti

UF and NANOFILTRATION PILOT PLANT

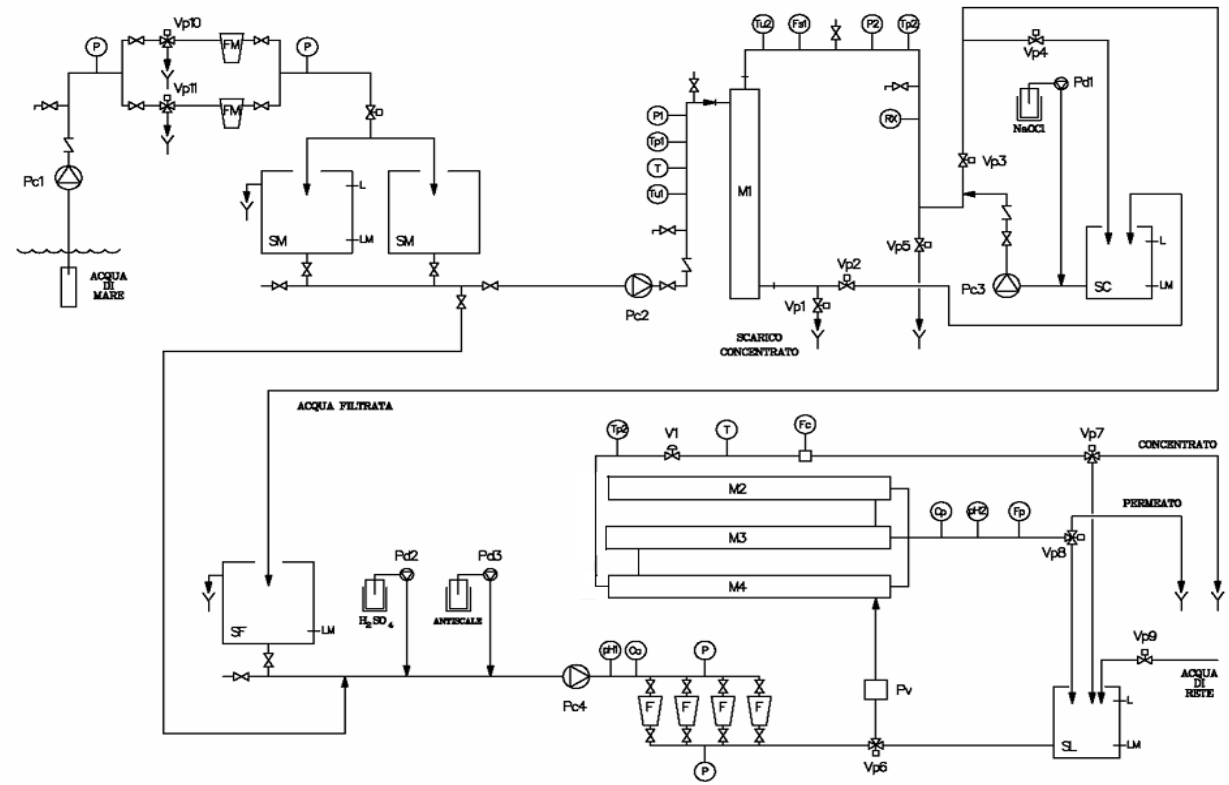

NF pilot plant performances

IONIC BALANCES NF

Riferimento:Dati analitici laboratorio del 28.04.08

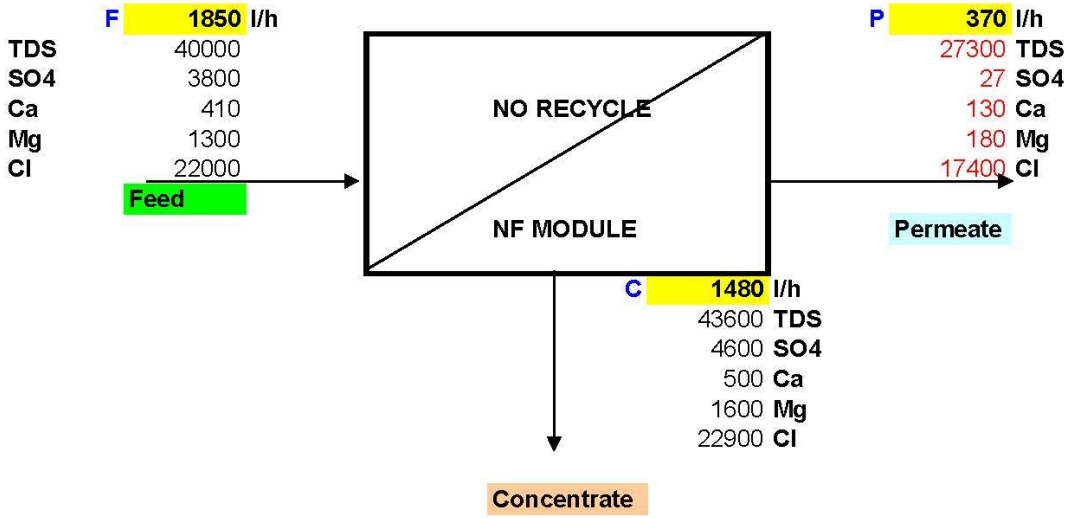

NF pilot plant performances

IONIC BALANCES NF

Riferimento:Dati analitici laboratorio del 28.04.08

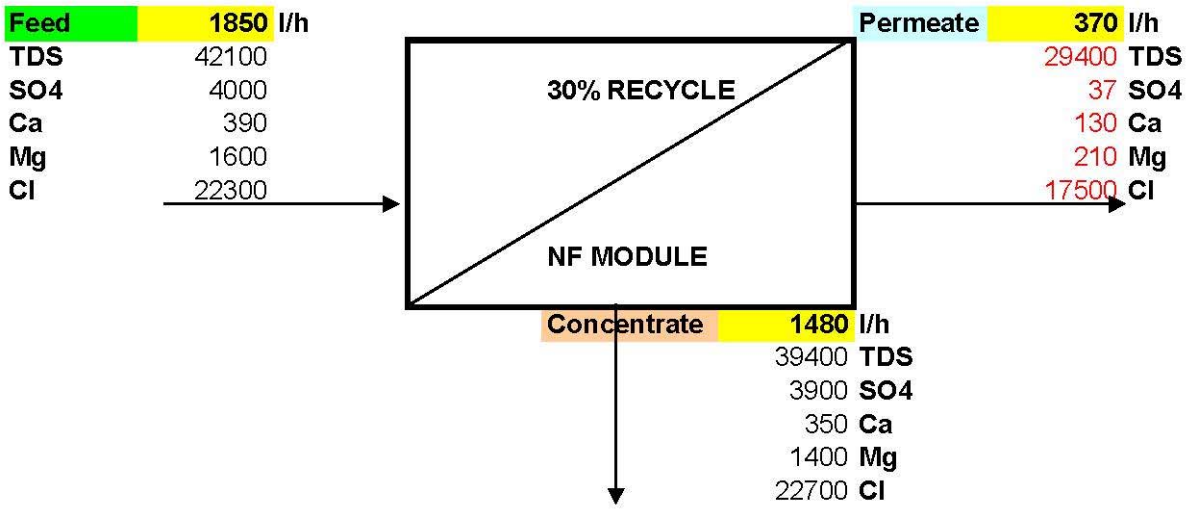

NF MAKE UP TREATMENT

In the simplified flow sheet the NF application to make up treatment of MSF plant is shown

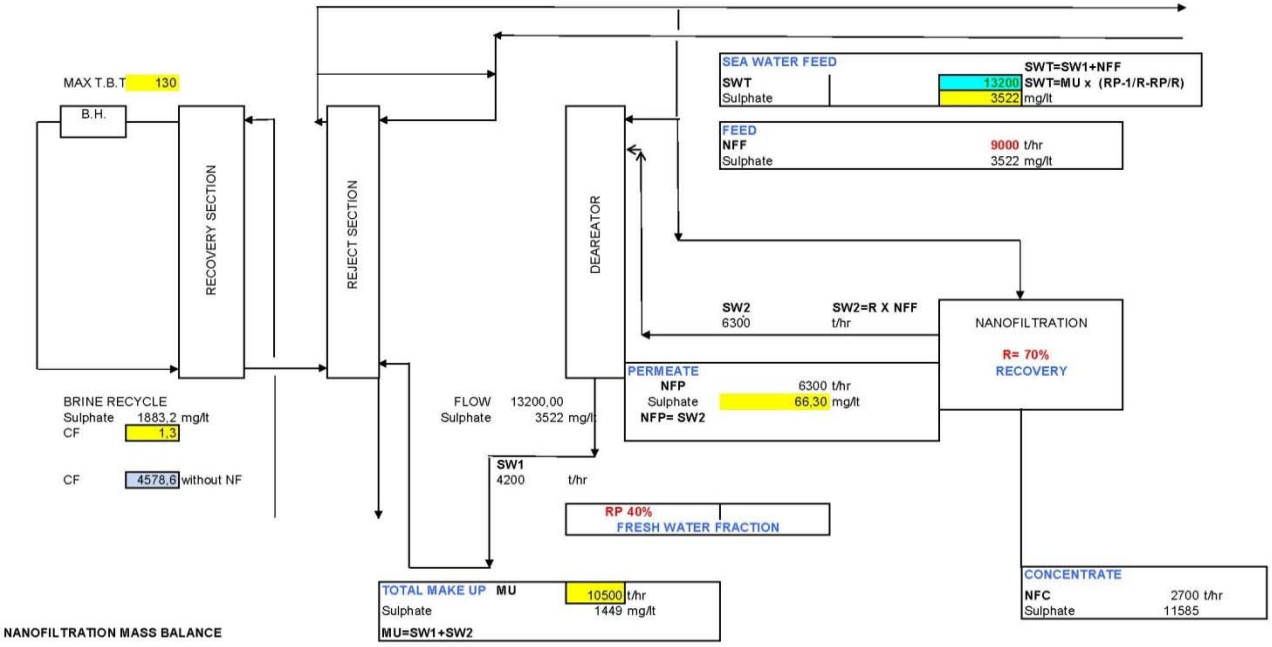

FO COUPLING WITH RO UNIT

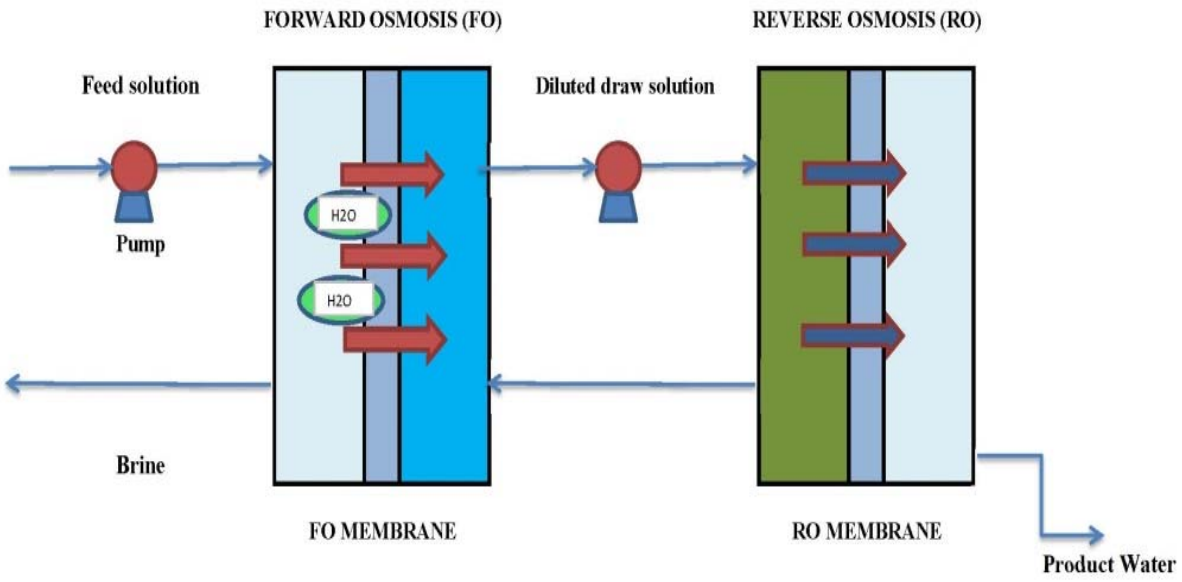

MSF FO HYBRID SYSTEM

A promising application of FO is the combination of this technology with MSF units; in this application the Brine Blowdown is used as draw solution.

In the FO unit a portion of MSF plant Blow down is diluted with the water coming from the sea water feed that is concentrated and discharged; the diluted draw solution is fed to MSF unit as make up.

MSF FO HYBRID SYSTEM

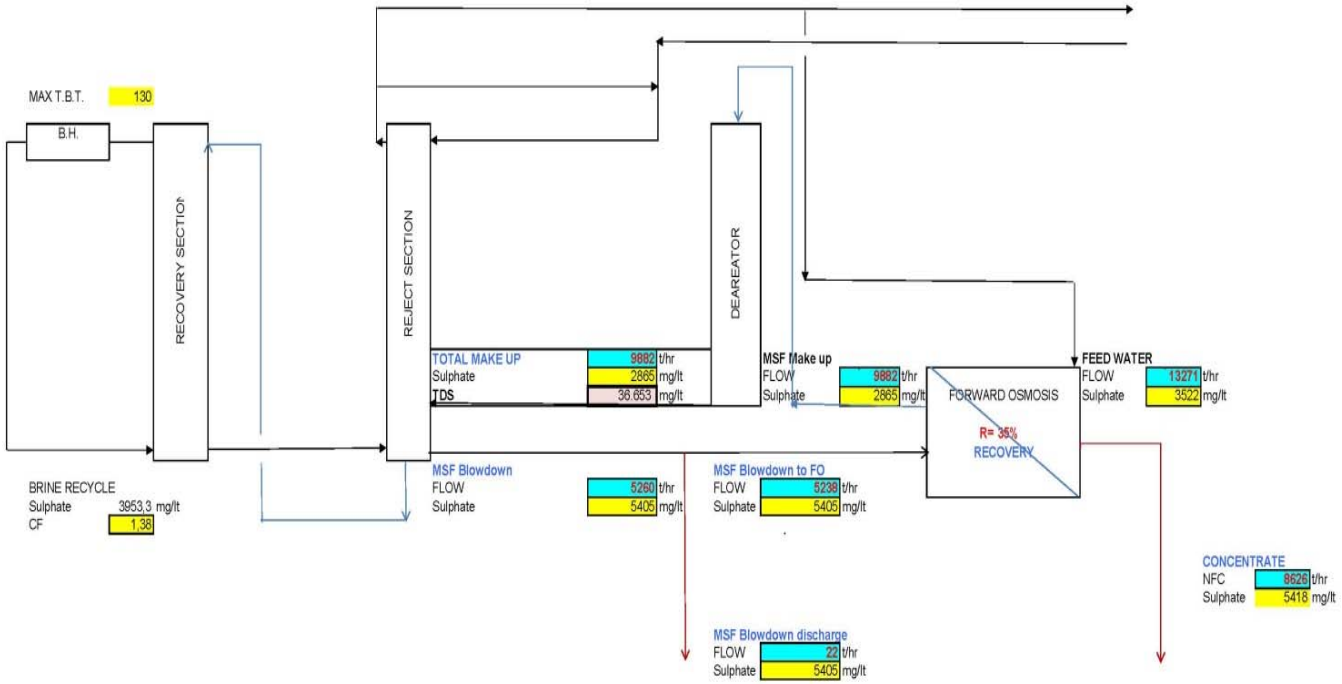

MSF FO HYBRID SYSTEM

A mathematical model has been developed to take into account the variation of different streams of the plant in dependence of FO recovery and performances and in dependence of TBT of MSF plant.

Theoretically the main advantages of this hybrid solution are:

- Possibility to increase the T.B.T. due to the fact that the MSF make up contains a negligible carbonates quantity

- Reduced chemicals consumption

- In dependence from the TBT increase is possible to increase the Performance Ratio and the Distillate Production

MSF FO HYBRID SYSTEM
Discharged flow versus FO Recovery

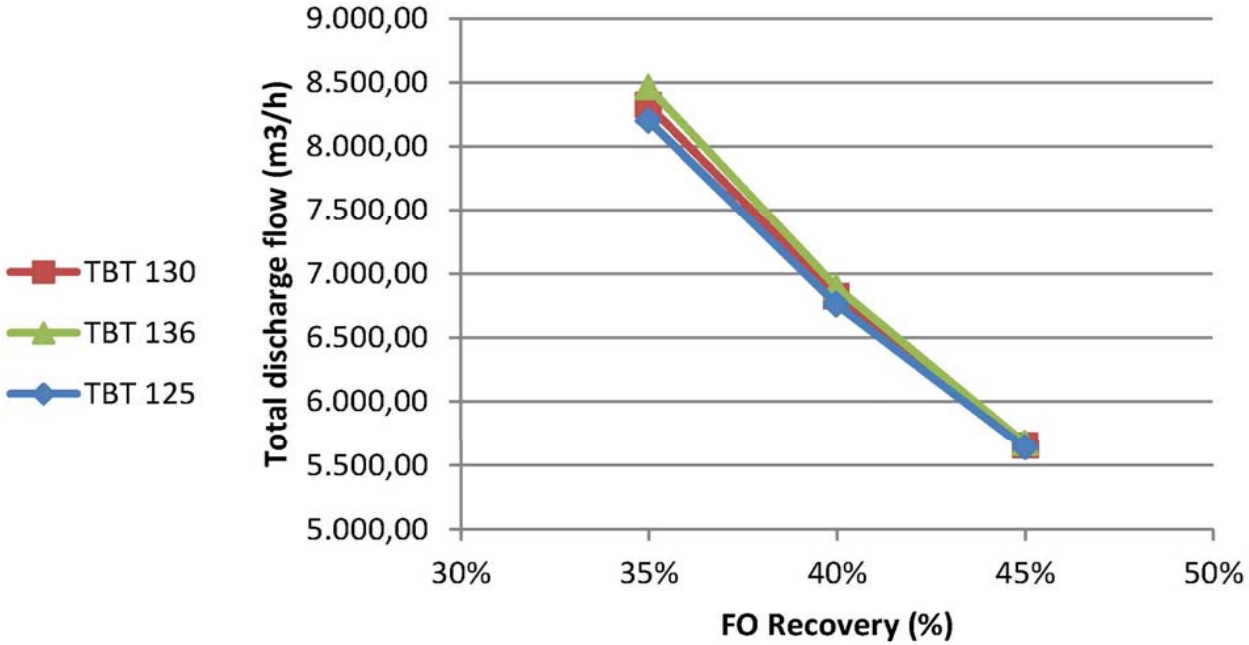

MSF Plant 15 MIGD

CONCLUSIONS: ACID TREATMENT

The use of the make up acid treatment was abandoned in favour of antiscale treatment for the risk to increase the plant corrosion; due to the progress in the use of new corrosion resistant material this type of treatment could be reconsidered taking into account the advantages that this system has potentially with respect to the antiscale treatment. Existing MSF units with antiscale treatment system could be equipped with an additional decarbonating tower and acid injection system, whereas the M.P. steam consumption can be reduced due to the low uncondensable load to be evacuated from the plant.

CONCLUSIONS: NF TREATMENT

The use of Nanofiltration as pretreatment has been tested in several MSF plants in KSA but the only plant operating with this system is the plant of Layyah; as far as the use of this system to improve the performance of an existing MSF plant an accurate evaluation of cost impact shall be carried out considering the capex for the NF unit, the need of an accurate pretreatment of the feed water to NF plant and the modification necessary to the MSF unit to follow the performance change.

CONCLUSIONS: FO TREATMENT

The use of FO integration with a MSF thermal plant could be a promising technology taking into account that minor modification should be applied to the existing thermal plant; high recovery FO membranes should be used to limit the blowdown discharge and to reduce the capex of the FO units. The theoretical advantages should be the chemicals consumption reduction and the lower fouling of FO membranes compared to NF membranes

CONCLUSIONS

Different MSF make up treatment methods to increase the Performances of MSF desalination units has been examined:

- Acid treatment
- NF
- FO

- The first and oldest system should be reconsidered for new design plant taking into account the new corrosion resistant materials.

- NF has been used and tested but limited industrial application are known.

- FO is a promising technology and should be tested to check performances and cost impact to verify the real application benefits.

Thank you !